5th International Conference on Advances in Steel Structures,

Singapore, 5 – 7 December 2007

A Component Method Model for Semi-Rigid End-Plate Beam-to-Column Joints Including the Axial versus Bending Moment Interaction

A.A. Del Savio [a,c] & D.A. Nethercot [a]

[a] *Department of Civil and Environmental Engineering, Skempton Building, Imperial College London, South Kensington Campus, London SW7 2BU, United Kingdom*
a.delsavio@imperial.ac.uk and d.nethercot@imperial.ac.uk

P.C.G.S. Vellasco [b]

[b] *Structural Engineering Department, UERJ – State University of Rio de Janeiro, Rua São Francisco Xavier, 524, Sala 5018A, Maracanã, Rio de Janeiro, RJ – Brazil, CEP: 20550-900*
vellasco@uerj.br

S.A.L. Andrade [b,c] & L.F. Martha [c]

[c] *Civil Engineering Department, PUC-Rio – Pontifical Catholic University of Rio de Janeiro, Rua Marquês de São Vicente, 225, Gávea, Rio de Janeiro, RJ – Brazil, CEP: 22453-900*
andrade@civ.puc-rio.br and lfm@tecgraf.puc-rio.br

Abstract

Nowadays, using the Eurocode 3 component method, it is possible to evaluate the rotational stiffness and moment capacity of semi-rigid joints when subject to pure bending. However, this component method is not yet able to calculate these properties when, in addition to the applied moment, an axial force is also present. The main aim of this paper is to propose a mechanical model for semi-rigid end-plate beam-to-column joints including the axial force versus bending moment interaction. This paper also presents a detailed description of the numerical results that were generated and validated against experiments and analytical data.

1. Introduction

Under certain circumstances, beam-to-column joints can be subjected to the simultaneous action of bending moments and axial forces. Although, the axial force transferred from the beam is usually low, it may, in some situations attain values that significantly reduce the joint flexural capacity. For example, because of the recent escalation of terrorist attacks on buildings, the study of progressive collapse of steel framed building has been highlighted, as can be seen in Vlassis et al. (2006). Examples of these exceptional conditions are the cases where structural elements, such as central and/or peripheral columns and/or main beams, are suddenly removed, sharply increasing the joint axial forces. In these situations the structural system, mainly the connections, should be sufficiently robust to prevent the premature failure modes that may lead to progressive structural collapse.

Unfortunately, few experiments considering the bending moment versus axial force interactions have been reported. Additionally, the available experiments are associated with a small number of axial force levels and associated bending moment versus rotation curves. There is, therefore, a need to develop the mechanical model for semi-rigid end-plate beam-to-

column joints including the axial force versus bending moment interaction, based on the principles of the component method, Eurocode 3 (2005).

1.1 Background: experimental and theoretical models

Study of the semi-rigid characteristics of beam to column connections and their effects on frame behaviour can be traced back to the 1930s, Li et al. (1995). Since then, a large amount of experimental and theoretical work has been conducted both on the behaviour of the connections and on their effects on complete frame performance. Despite the large number of experiments, they do not cover all possible connection ranges. As an alternative to tests, other methods have been proposed to predict bending moment versus rotation curves.

Recently, several researchers have paid special attention to joint behaviour under combined bending moment and axial force, for example, Wald and Svarc (2001), Lima et al. (2003) and Simões da Silva et al. (2004). The investigators concluded that the presence of the axial force in the joints modifies their structural response and, therefore, should be considered. Regarding theoretical models recently developed to predict the behaviour of beam-to-column joints under bending moment and axial force, it is possible to mention Jaspart (2000) and Cerfontaine (2001), who have applied the principles of the component method to establish design predictions of the M-N interaction curves and initial stiffness. Lima et al. (2003) and Simões da Silva et al. (2004) proposed mechanical models for extended and flush end-plate joints, respectively. Although these models presented satisfactory results in terms of final flexural capacity, the prediction of the initial stiffness was not accurate, mainly for the case where the model was subjected to tensile forces. This might have occurred because in both cases the authors included the compressive components at the same location as the bolt rows and the tensile components at the same location as the flanges (compressive rows).

2. Mechanical Model for End-Plate Joints Including the Axial-Moment Interaction

The mechanical model proposed for semi-rigid end-plate beam-to-column joints including the axial force versus bending moment interaction is depicted in Fig. 1. The main goal of this model is to evaluate the axial force in each model spring when subjected to the simultaneous action of moment and axial force. With the model results in hand, it is possible to adopt a consistent component distribution to be used following the Eurocode 3 (2005) principles.

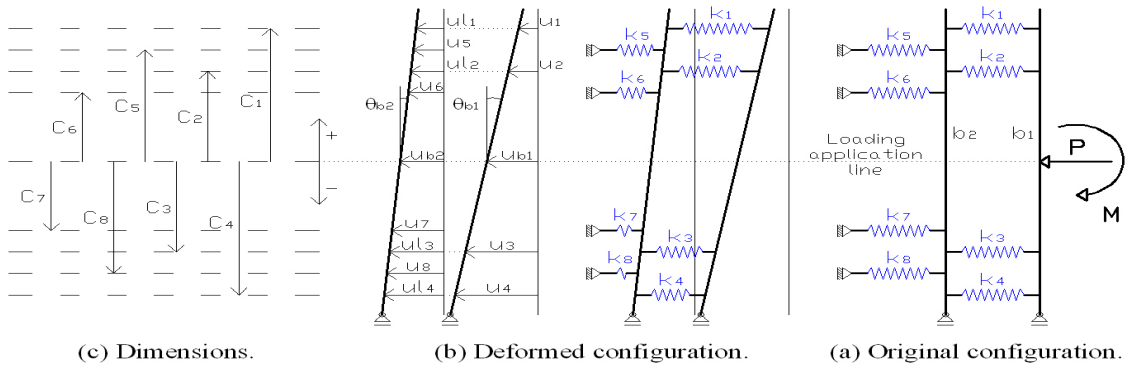

(c) Dimensions. (b) Deformed configuration. (a) Original configuration.

Figure 1. Proposed mechanical model for semi-rigid joints.

2.1 Formulation

The stationery potential energy principle was used to formulate the model stiffness matrix and the corresponding equilibrium equation. The total potential energy functional, Π, is:

$$\Pi = U - W \tag{1}$$

where U is the system strain energy and W is the load total potential. The system strain energy can be expressed in terms of the spring stiffness, k_i, and relative displacements, Δ_i, as:

$$U = \frac{1}{2}\sum_{i=1}^{ns} k_i \Delta_i^{\,2} \tag{2}$$

where ns is the system spring number. Assuming small displacements, the relative (Δ_i,) and absolute (u_i and ul_i) displacements for the system presented in Fig. 1 can be evaluated as:

$$\begin{array}{ll} Bar\ 1 & Bar\ 2 \\ \Delta_i = u_i - ul_i & \Delta_i = u_i \\ u_i = u_{b1} - C_i \sin(\theta_{b1}) & u_i = u_{b2} - C_i \sin(\theta_{b2}) \\ ul_i = u_{b2} - C_i \sin(\theta_{b2}) & \end{array} \tag{3}$$

where C_i is the spring vertical coordinate i regarding the load application line. The spring coordinates above the loading application line must be informed positively and below it negatively. And θ_{b1} and θ_{b2} are the rotation angles of bars 1 and 2, respectively. The total potential of the loads for the system of Fig. 1 is:

$$W = P(u_{b1} - u_{b2}) + M\theta_{b1} \tag{4}$$

where P is the axial load and M is the bending moment. Using the potential energy principle, the equilibrium equations can be evaluated from the functional stationary condition Π,

$$\frac{\partial \Pi}{\partial d_i} = 0\,; \quad d_i = u_{b1}, \theta_{b1}, u_{b2}, \theta_{b2} \tag{5}$$

the stiffness matrix, K_{ij}, and internal load vector, F_i, can be derived using Eq. 2,

$$K_{ij} = \frac{\partial^2 U}{\partial d_i \partial d_j}\,; \quad d_i = u_{b1}, \theta_{b1}, u_{b2}, \theta_{b2} \qquad F_i = \frac{\partial U}{\partial d_i}\,; \quad d_i = u_{b1}, \theta_{b1}, u_{b2}, \theta_{b2} \tag{6}$$

Approximating the trigonometric expressions in Eq. 3 to the first order, the model stiffness matrix, Fig. 1, for any spring number at any position can be evaluated as:

$$\begin{bmatrix} K_{11} = \sum_{i=1}^{ns_{b1}} k_i & K_{12} = -\sum_{i=1}^{ns_{b1}} k_i L_i & K_{13} = -K_{11} & K_{14} = -K_{12} \\ & K_{22} = \sum_{i=1}^{ns_{b1}} k_i L_i^2 & K_{23} = K_{14} & K_{24} = -K_{22} \\ & Symmetric & K_{33} = \sum_{i=1}^{ns} k_i & K_{34} = -\sum_{i=1}^{ns} k_i L_i \\ & & & K_{44} = \sum_{i=1}^{ns} k_i L_i^2 \end{bmatrix} \tag{7}$$

and the internal loading vector is:

$$F = [P \quad M \quad 0.0 \quad 0.0]^T \tag{8}$$

For the correct use of the component method the knowledge of which model rows (bolts and flanges) are in tension and/or compression is needed due to their impact on the evaluation of the joint rotation and the flexural capacity. In the usual Eurocode 3 (2005) mechanical model for joints subjected only to bending moment actions, it is straightforward to identify which rows are in compression and/or tension. However, when additional axial forces act on the joint, the identification whether each row is in tension or compression is not known in advance. This fact implies in the determination of the limit bending moment for the proposed mechanical model, Fig. 1, a need to identify when the row forces change from compression to

tension or vice-versa. This limit bending moment can be obtained by adopting the relative displacement for the first spring (located on the first bar) equal to zero, i.e., $\Delta_1 = u_1 - ul_1 = 0$. Then, isolating u_{b1} from Eq. 3 for the relative displacement of the first spring,

$$u_{b1} = \Delta_1 + C_1 \sin(\theta_{b1}) + u_{b2} - C_1 \sin(\theta_{b2}) \tag{9}$$

and substituting u_{b1} into the two first equilibrium equation of Eq. 5,

$$\frac{\partial \Pi}{\partial u_{b1}} = 0 \quad and \quad \frac{\partial \Pi}{\partial \theta_{b1}} = 0 \tag{10}$$

and then, isolating θ_{b1} from the first equilibrium equation, Eq. 10, and substituting it into the second equilibrium equation, Eq. 10, and putting Δ_1 equal to zero, and finally isolating the bending moment gives the following expression for the limit bending moment:

$$M_{\lim} = P\left(\frac{\sum_{i=1}^{ns_{b1}} k_i C_i^2 - C_1\left(\sum_{i=1}^{ns_{b1}} k_i C_i\right)}{C_1\left(\sum_{i=1}^{ns_{b1}} k_i\right) - \sum_{i=1}^{ns_{b1}} k_i C_i}\right) \tag{11}$$

According to Eq. 11, for: $M < M_{lim}$ all rows are compressed; $M = M_{lim}$ first spring axial force is equal to zero; and $M > M_{lim}$ are the tensioned and compressed rows.

3. Application of the Proposed Mechanical Model

The extended end-plate joint tested by Lima et al. (2003), Fig. 2, was used to test and validate the proposed model, considering the influence of the axial force, in terms of the rotational stiffness and the flexural resistance. The joint material properties, the theoretical values of the strength and initial stiffness for all the extended end-plate joint components and the experimental moment-rotation curves can be found in Lima et al. (2003). Based on these extended end-plate joint properties, the following model was adopted, Fig. 3. Table 1 gives the experimental axial force (N) and bending moment (M_{jRd}) used in each analysis. Table 1 also presents the limit bending moment (M_{limit}), which was evaluated using Eq. 11, and the lever arm d, which represents the rigid link position that unites the second bar to the supports, Fig. 3. The lever arm d for EE6 and EE7 was evaluated as being the place where it was possible to attain the maximum axial force for the first bolt row and the beam bottom flange row; for EE2 and EE4 it was obtained by taking the sum of individual bolt row moments at the beam bottom flange divided by the sum of bolt row forces; for EE1 it was adopted at the same row as the first bolt row.

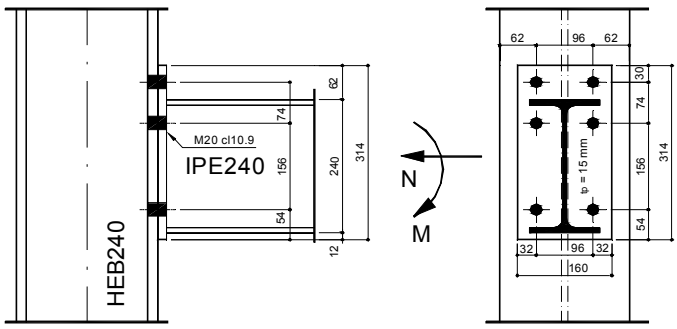

Figure 2. Extended end-plate joint, Lima et al (2003).

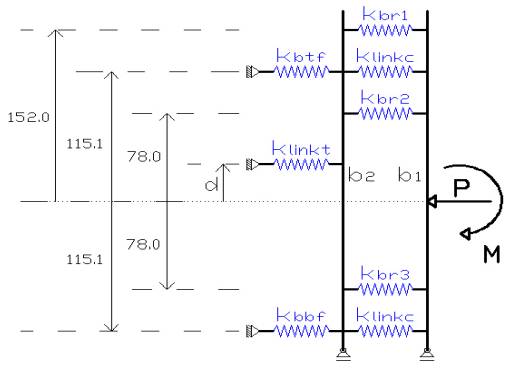

Figure 3. Proposed mechanical model.

Before analysing the mechanical model, Fig. 3, it was necessary to decide if the joint components were subjected to compression, tension or both. This was done by evaluating the

limit bending moments (M_{limit}), with the aid of Eq. 11. These results are illustrated in Table 1. An appropriate mechanical model for every axial force level could then be determined based on these limit bending moments. For example, for EE4 joint, Table 1, for bending moments smaller than M_{limit}, i.e. equal to *19.78 kNm*, the spring stiffness: k_{br1}, k_{br2}, k_{br3} and k_{linkt} , Fig. 3, would be equal to zero. On the other hand, if it was larger than M_{limit}, the stiffness: k_{btf} and k_{linkc} (placed at the same line as k_{btf}), Fig. 3, would be made equal to zero.

Table 1. Experimental axial forces/moments, limit moments, and the lever arm *d*.

Test	*N (kN)*	M_{jRd} *(kNm)*	M_{limit} *(kNm)*	*d (mm)*
EE1 (only M)	*0.0*	*118.7*	*0.0*	*152.0*
EE2 (-10% N_{pl})	*-135.94*	*125.4*	*10.37*	*117.6*
EE4 (-27% N_{pl})	*-259.2*	*113.2*	*19.78*	*117.6*
EE6 (+10% N_{pl})	*127.2*	*111.5*	*-9.70*	*41.0*
EE7 (+20% N_{pl})	*257.9*	*101.0*	*-19.62*	*20.0*

Knowing the limits for each axial force level, it was possible to analyse the proposed model, Fig. 3. The results of each analysis, compared to their equivalent experimental test, are shown in Figures 4(a), 4(b) and 4(c). Subsequently, Fig. 4(d) depicts the whole set of numerical results. For each moment-rotation curve, the first point defines the joint initial stiffness corresponded to initiation of the weakest component yield while the second point was obtained adopting half of all the component stiffnesses and increasing the moment up to the experimental moment, M_{jRd}, Lima et al. (2003), Table 1.

Five experimental moment-rotation curves, of Lima et al. (2003), were used to validate the proposed mechanical model, Fig. 4. Fig. 4(a) illustrates the comparisons between the proposed model and EE1 moment-rotation curve that was only subjected to bending moments. For this case, the point that characterises the joint initial stiffness was defined by the end-plate in bending yield. Fig. 4(b) presents comparisons between the proposed model and EE2 and EE4 moment-rotation curves that respectively consider compressive forces of 10% and 27% of the beam axial plastic resistance. The EE2 joint initial stiffness was defined by the end-plate in bending yield and was followed by the beam flange in compression yield while EE4 was characterised by the beam flange in compression yield. Fig. 4(c) draws the results for EE6 and EE7 moment-rotation curves that respectively consider tensile forces of 10% and 20% of the beam axial plastic resistance. For both cases the joint initial stiffness was firstly defined by the end-plate in bending yield. It was followed by the beam flange in compression and later reached the column web in compression yield.

Fig. 4(d) illustrates the set of numerical results showing that the joint subjected to tensile forces has its initial stiffness and flexural capacity decreased as tensile force increases. Alternatively, there is an increase in the joint flexural capacity for a compression of 10% of the beam plastic resistance. Above this value the flexural capacity again decreases. Additionally it is worth highlighting that the initial stiffness is strongly influenced by the rigid link lever arm *d*. Joints presenting similar rigid link lever arms *d* exhibited an insignificant variation of the initial stiffness as can be seen on the compressive force numerical results (EE2 and EE4). Generally the global behaviour of the numerical moment-rotation curves are in agreement with the test curves, Lima et al. (2003), producing numerical results that closely approximate the initial stiffness and flexural resistance.

4. Conclusions

Based on the general principles of the component method, a mechanical model was proposed to estimate the end-plate joint behaviour subjected to bending moments and axial forces.

Application and validation of this mechanical model, using experimental tests executed by Lima et al. (2003) on five extended end-plate joints, was performed and led to accurate prediction of the experiment's key variables.

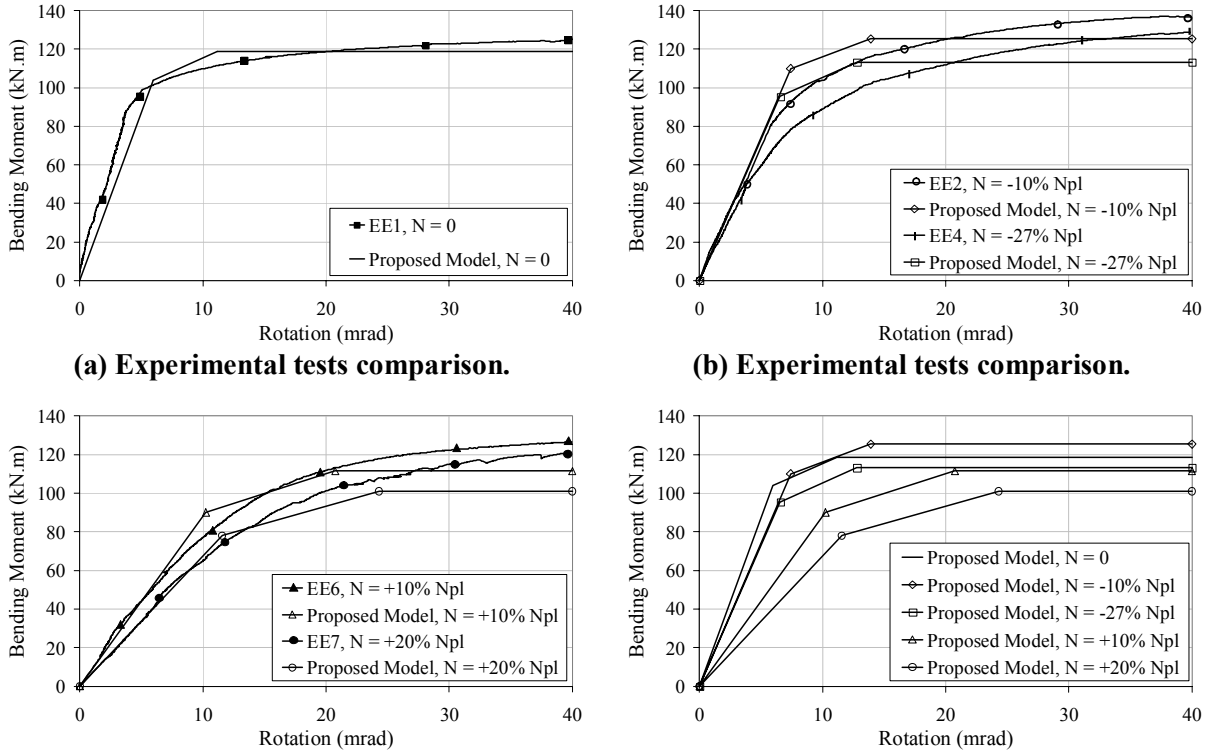

(a) Experimental tests comparison. **(b) Experimental tests comparison.**

(c) Experimental tests comparison. **(d) Moment-rotation curves.**

Figure 4. Proposed mechanical model.

5. Acknowledgements

The authors gratefully acknowledge the financial support provided by the Brazilian National and State Scientific and Technological Developing Agencies: CNPq, CAPES and FAPERJ.

6. References

Cerfontaine, F. (2001). Etude analytique de l'interaction entre moment de flexion et effort normal dans les assemblages boulonnés. *Construction Métalique*, 4: 1-25 (in French).

Eurocode 3 (2005), 1993-1-8, *Eurocode 3: Design of steel structures – Part 1.8: Design of joints*. May 2005. CEN, European Committee for Standardisation, Brussels.

Jaspart J.-P. (2000). General report: session on connections. *J. of Cons. Steel Research*, vol. 55, n.1-3: 69-89.

Li, T.Q., Choo, B.S. & Nethercot, D.A. (1995). Connection Element Method for the Analysis of Semi-rigid Frames. *Journal Constructional Steel Research*, 32: 143-171.

Lima, L.R.O. de. (2003). Behaviour of endplate beam-to-column joints under bending and axial force. *Ph.D. Thesis. PUC-Rio, Pontifical Catholic University, Civil Eng. Dept., Rio de Janeiro, Brazil*. [in Portuguese]

Simões da Silva, L., Lima, L.R.O. de, Vellasco, P.C.G.S. & Andrade, S.A. de. (2004). Behaviour of flush end-plate beam-to-column joints under bending and axial force. *Steel and Composite Structures*, vol. 4, n. 2: 77-94.

Vlassis, A.G., Izzuddin, B.A., Elghazouli, A.Y. & Nethercot, D.A. (2006). Design Oriented Approach for Progressive Collapse Assessment of Steel Framed Buildings. *Structural Engineering International (Report)*, SEI Editorial Board: 129-136.

Wald, F. & Svarc, M. (2001). Experimental with endplate joints subject to moment and normal force. Contribution to experimental investigation of eng. materials and structures. *CTU Report n: 2-3, Prague*:1-13.